PNEU TOOLS

MS1565

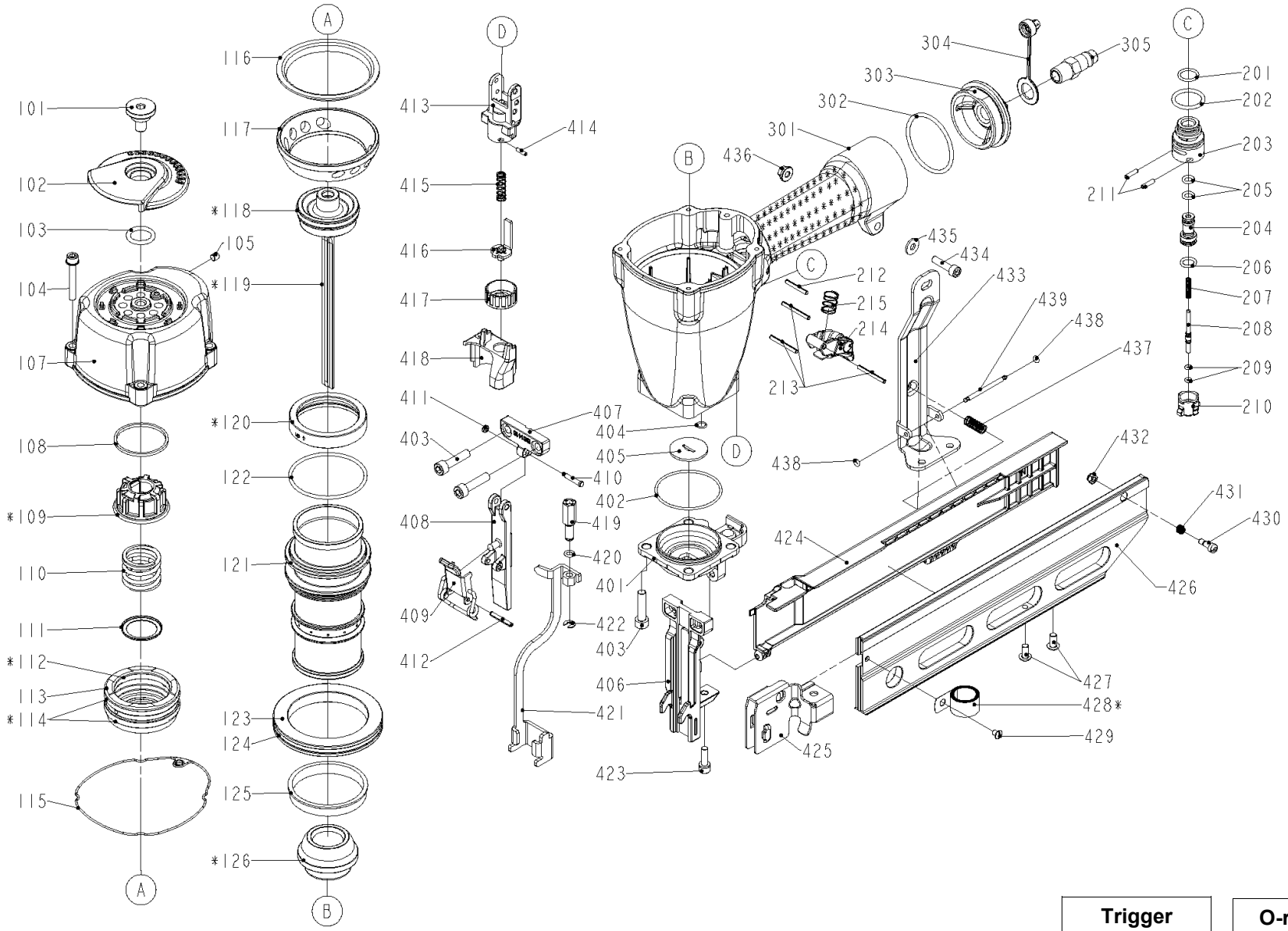

Trigger Assembly Kit
830402

O-ring Kit
MS1565-ORINGKIT

STANDARD CROWN STAPLER

PNEU TOOLS

MS1565

15ga. Medium Crown Stapler

Item	Part Number	Description	Item	Part Number	Description
101	920800	DEFLECTOR PAD	303	810922	END CAP
102	920801	DEFLECTOR	304	940620	AIR PLUG CAP
103	830612	O - RING (in O-ring Kit)	305	920320	AIR PLUG
104	921025	BOLT W/FLAT WASHER	401	830990	BASE
105	920502	HEX.SOC.HD.SCREW	402	920829	O - RING (in O-ring Kit)
107	921026	CAP	403	820667	HEX.SOC.HD.BOLT
108	820413	WASHER SEAL	404	920828	O - RING (in O-ring Kit)
109	820312	SEAL	405	830991	DRIVER GUIDE
110	810871	COMPRESSION SPRING	406	830992	DRIVER GUIDE
111	820415	WASHER	407	830993	DRIVER GUIDE COVER B
112	920808	O - RING (in O-ring Kit)	408	830994	DRIVER GUIDE COVER A
113	820153	HD.VALVE PISTON	409	830995	LOCK HANDLE UNIT
114	830319	O - RING (in O-ring Kit)	410	830996	FEED FINGER PLUG
115	920806	PACKING	411	920553	PU RETAINER
116	920813	PRESS RING	412	820882	SPIRAL PINS
117	920882	CYLINDER PRESS RING	413	810826	SAFETY GUIDE
118	830242	O - RING (in O-ring Kit)	414	920371	SPRING PIN
119	830989	DRIVER UNIT	415	810806	SAFETY SPRING
120	820569	COLLAR	416	830997	SAFETY B
121	921028	CYLINDER	417	820534	ADJUST AXIE
122	920817	O - RING (in O-ring Kit)	418	820374	COVER-SAFETY
123	920820	CYLINDER SPACER	419	820536	ADJUST ROD
124	920821	O - RING (in O-ring Kit)	420	830271	O - RING (in O-ring Kit)
125	920819	CYLINDER RING	421	830998	SAFETY
126	920822	BUMPER	422	920211	E - RING
201	Order as Trigger Assembly Kit P/N: 830402	O - RING	423	830999	BOLT ASSY
202		O - RING	424	831000	MOUNTING BRACKET
203		PLUNGER CAP	425	831001	PUSHER
204		VALVE PLUNGER	426	831002	MAGAZINE A
205		O - RING	427	831003	HALF ROUND HD.HEX.BOLT
206		O - RING	428	831004	SPRING
207		SPRING	429	820696	SPECIAL SCREW
208		PLUNGER	430	841161	DOOR LATCH
209		O - RING	431	920155	LATCH SPRING
210		TRIGGER VALVE HEAD	432	830005	LOCK NUT
211		SPRING PIN	433	831005	POSITIONING SHEET
212	920824	SPRING PIN	434	820648	HEX.SOC.HD.BOLT
213	920530	SPRING PIN	435	920572	FLAT WASHER
214	810101	TRIGGER UNIT	436	920573	BOLT CAP
215	810882	SPRING	437	831006	SAFETY SPRING
301	921029	GUN BODY UNIT	438	841680	PU RETAINER
302	920540	O - RING (in O-ring Kit)	439	831008	HINGE POINT

Kits and Assemblies

O-ring Kit
MS1565-ORINGKIT

Trigger Assembly Kit
830402

*Individual O-rings are available in packs of 25